THIS DRAWING IS UNPUBLISHED. RELEASED FOR PUBLICATION -,N/A .
© COPYRIGHT N/A BY TYCO ELECTRONICS CORPORATION. ALL INTERNATIONAL RIGHTS RESERVED.

LOC	DIST
DF	DO

REVISIONS

P	LTR	DESCRIPTION	DATE	DWN	APVD
	S	REVISED PER ECO-09-012541	26MAY09	CT	RL

1. THIS PLUG WILL MATE WITH ANY 5C5, SIZE 3 RECEPTACLE IN AMPLIMITE SERIES.
2. USE (5) SIZE 8 POWER, OR COAX PIN CONTACTS. CONSULT PRODUCT ENGINEERING FOR MORE DETAILS.

3. CADMIUM PLATED PER QQ-P-416, TYPE II, CLASS 2.
4. FINISH: TIN PER ASTM-B-545 .000200 MIN THK OVER COPPER PER AMS2418 .000100-.000200 THK.
5. GROUNDING INDENTS FOR 212491-3, 212491-5, 212491-9, 5-212491-3, & 5-212491-5 (NOT SHOWN ON DWG).
6. 212491-5 & 5-212491-5 SUPPLIED WITH 4-40UNC-2B CLINCH NUTS IN THE MOUNTING HOLE LOCATIONS.
7. UL/CSA DESIGNATION STAMPED IN THIS AREA, OPTIONAL.
8. STEEL PER ASTM-A-109.
9. BRASS PER ASTM-B-36 AND MIL-C-50.
10. FINISH: PLATED GOLD PER MIL-G-45204, TYPE II, GRADE C OVER COPPER PLATE PER MIL-C-14550, CLASS IV.
11. FINISH: TIN PER ASTM-B-545 .000200 MIN THK OVER COPPER PER AMS2418 .000100-.000200 THK.
12. FINISH: BRIGHT TIN PER ASTM-B-545 .000400-.000550 THK OVER COPPER PER AMS2418 .000050 MIN THK.
13. FINISH: ZINC PLATE PER ASTM-B-633 .000200-.000400 THK WITH SUPPLEMENTARY CHROMATE (Cr3+).

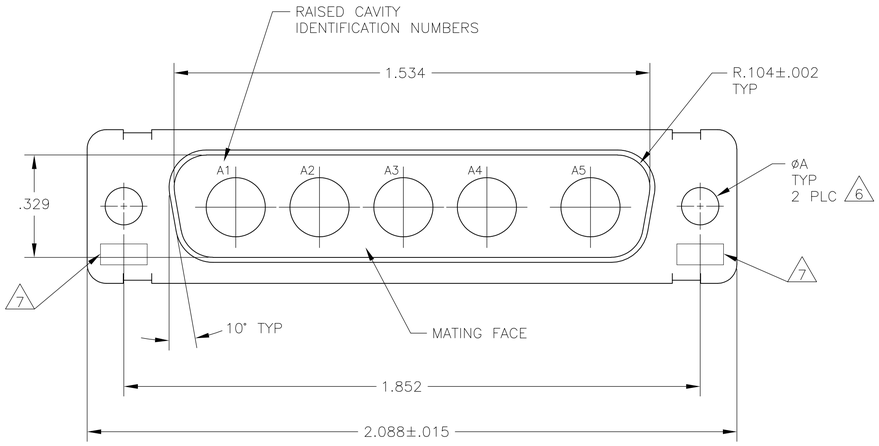

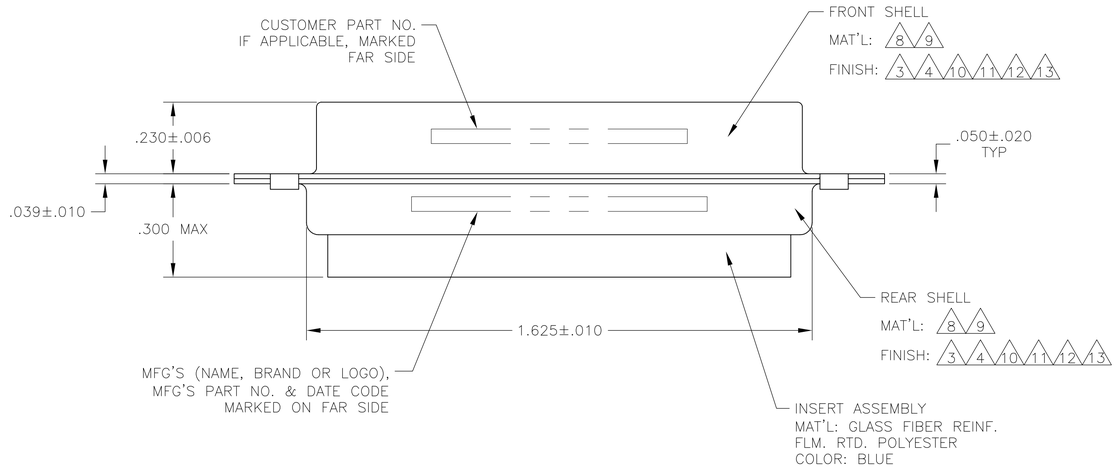

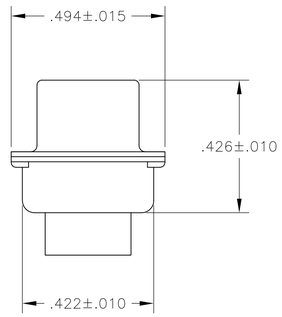

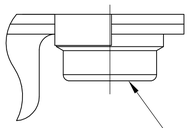

CLINCH NUT #4-40UNC
2 REQ'D
MATERIAL: CARBON STEEL
FINISH: PLATED ZINC
YELLOW CHROMATE
212491-5 ONLY

	CUSTOMER PART NO.	ØA	REMARKS	PART NO.
	NOT APPLICABLE	6	5 8 11	5-212491-5
	NOT APPLICABLE	.120	5 8 11	5-212491-3
	NOT APPLICABLE	.120	8 13	5-212491-1
	NOT APPLICABLE	.120	8 12	1-212491-0
	NOT APPLICABLE	.120	5 8 12	212491-9
	B010942-0015	.120	9 10	212491-8
	311P405-10P-B-15	.154	9 10	212491-7
	311P405-10P-B-12	.120	9 10	212491-6
	NOT APPLICABLE	6	4 5 8	212491-5
	97942-645A935H02	.120	3 8	212491-4
	NOT APPLICABLE	.120	4 5 8	212491-3
NOT RELEASED FOR PRODUCTION	NOT APPLICABLE	.120	3 8	212491-2
	NOT APPLICABLE	.120	3 8	212491-1

THIS DRAWING IS A CONTROLLED DOCUMENT.

DIMENSIONS: INCHES

TOLERANCES UNLESS OTHERWISE SPECIFIED:
0 PLC ± –
1 PLC ± –
2 PLC ± –
3 PLC ± .005[0.13]
4 PLC ± –
ANGLES ± 0°,30'

MATERIAL –
FINISH –

DWN C. THOMAS 04FEB88
CHK A. EMADI 09FEB88
APVD A. EMADI 09FEB88
PRODUCT SPEC —
APPLICATION SPEC —
WEIGHT —

Tyco Electronics
Tyco Electronics Corporation
Harrisburg, PA 17105-3608

NAME
PLUG ASSEMBLY
AMPLIMITE 5C5
SIZE 3, SERIES 109, COAX MIX

SIZE	CAGE CODE	DRAWING NO	RESTRICTED TO
A1	00779	C-212491	—

CUSTOMER DRAWING
SCALE 4:1 SHEET 1 OF 1 REV S

4805 (1/08)